KML Series

Metric Lock Nuts, DIN 981, C20 steel.



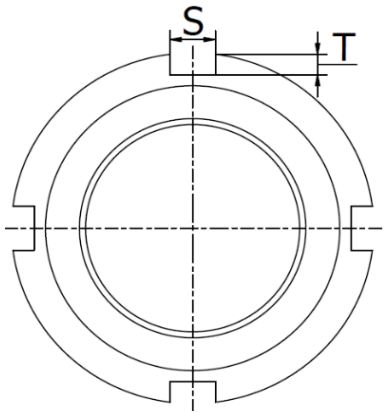

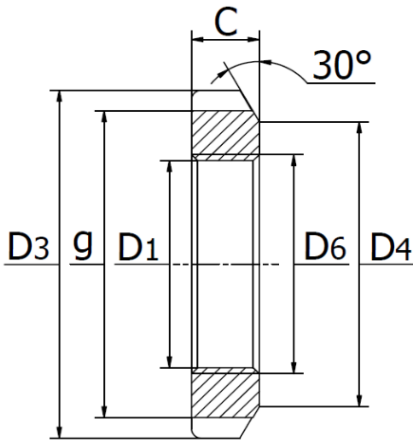

Product No.	Dimensions (mm)								Weight (kg)
	D_3	D_4	g	D_1	C	S	T	D_6	
KML24	145	135	135	M120 x 2,00	20	12	5,0	121,0	0,69
KML26	155	145	145	M130 x 2,00	21	12	5,0	131,0	0,82
KML28	165	155	155	M140 x 2,00	22	12	5,0	141,0	0,92
KML30	180	170	170	M150 x 2,00	24	14	5,0	151,0	1,31
KML32	190	180	180	M160 x 3,00	25	14	5,0	161,5	1,48
KML34	200	190	190	M170 x 3,00	26	16	5,0	171,5	1,63
KML36	210	200	200	M180 x 3,00	27	16	5,0	181,5	1,78
KML38	220	210	210	M190 x 3,00	28	16	5,0	191,5	1,95
KML40	240	220	224	M200 x 3,00	29	18	8,0	201,5	2,76